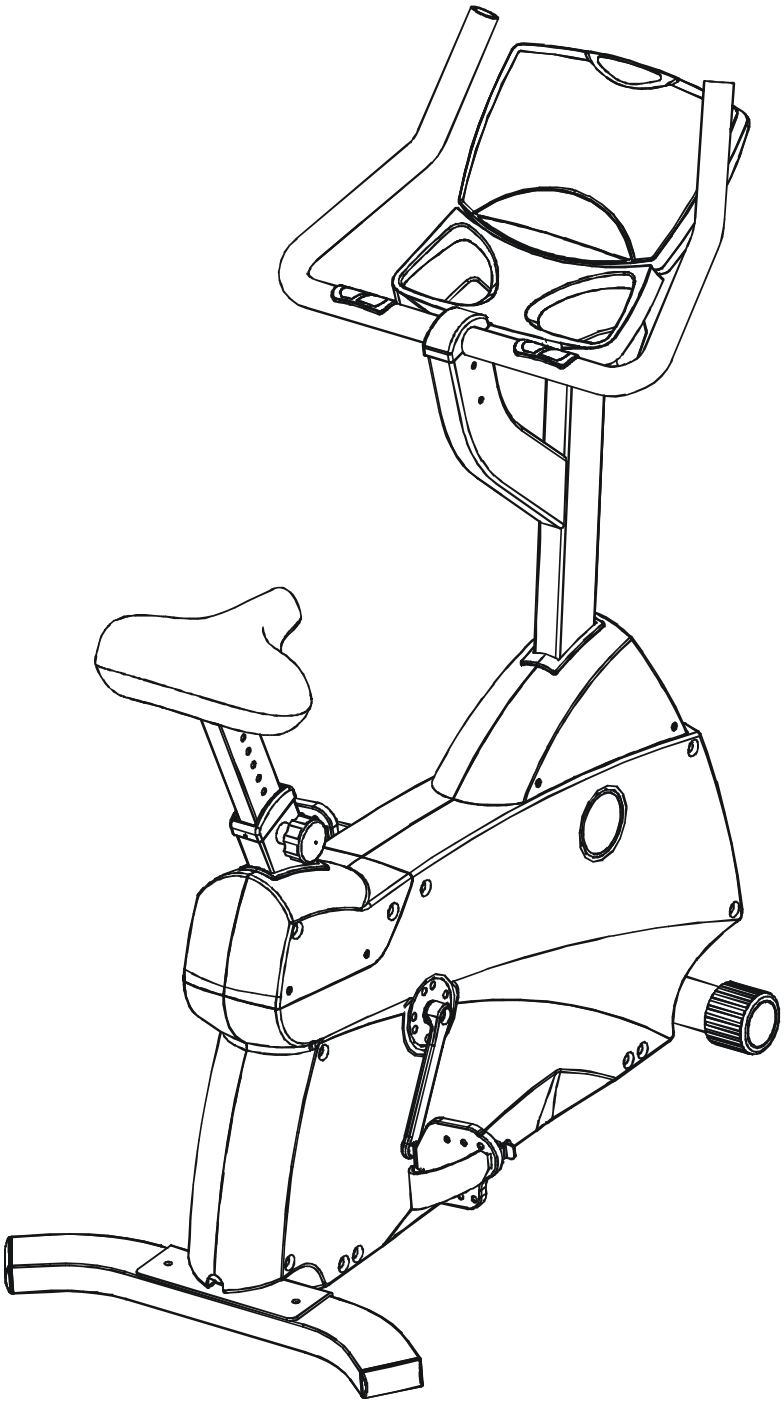

Service Manual M051-00K25-A059

rev. 08/08/05

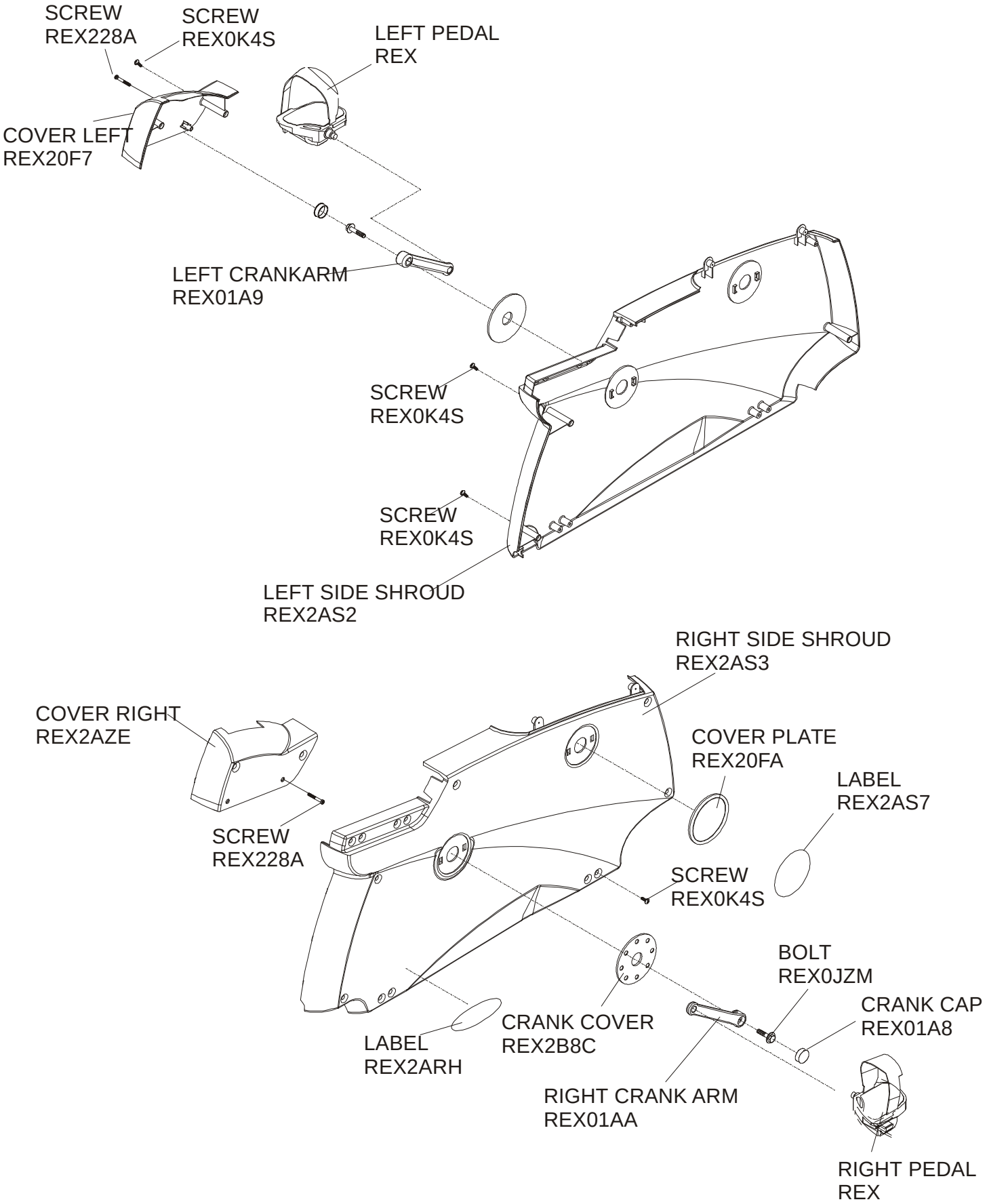
SCREW
REX228A
SCREW
REX0K4S
LEFT PEDAL
REX
COVER LEFT
REX20F7
LEFT CRANKARM
REX01A9
SCREW
REX0K4S
SCREW
REX0K4S
LEFT SIDE SHROUD
REX2AS2
RIGHT SIDE SHROUD
REX2AS3
COVER RIGHT
REX2AZE
COVER PLATE
REX20FA
LABEL
REX2AS7
SCREW
REX228A
SCREW
REX0K4S
BOLT
REX0JZM
CRANK CAP
REX01A8
CRANK COVER
REX2B8C
LABEL
REX2ARH
RIGHT CRANK ARM
REX01AA
RIGHT PEDAL
REX

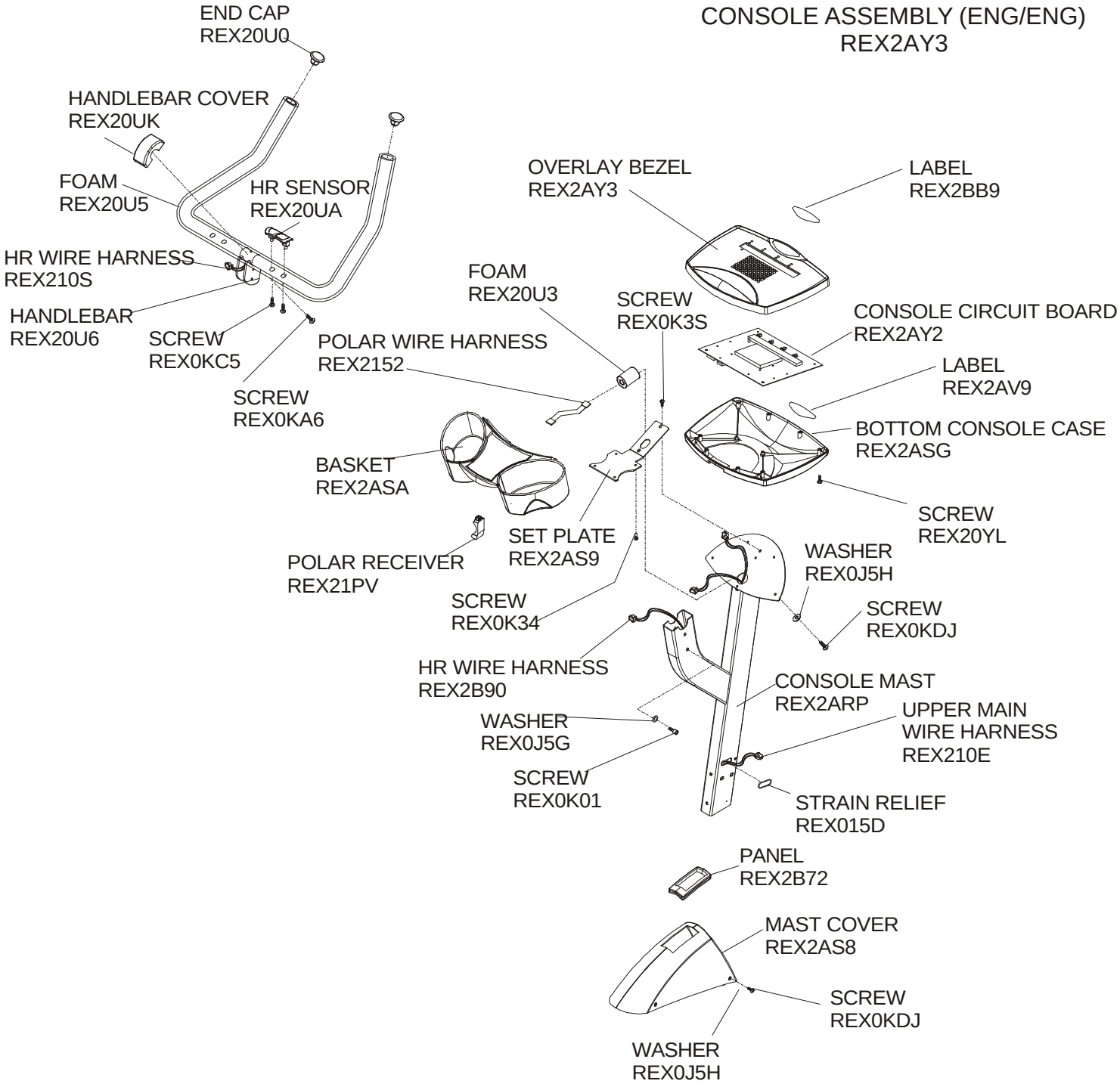
CONSOLE ASSEMBLY (ENG/ENG)
REX2AY3
END CAP
REX20U0
HANDLEBAR COVER
REX20UK
FOAM
REX20U5
HR SENSOR
REX20UA
HR WIRE HARNESS
REX210S
HANDLEBAR
REX20U6
SCREW
REX0KC5
SCREW
REX0KA6
POLAR WIRE HARNESS
REX2152
FOAM
REX20U3
OVERLAY BEZEL
REX2AY3
LABEL
REX2BB9
SCREW
REX0K3S
CONSOLE CIRCUIT BOARD
REX2AY2
LABEL
REX2AV9
BOTTOM CONSOLE CASE
REX2ASG
BASKET
REX2ASA
SCREW
REX20YL
SET PLATE
REX2AS9
POLAR RECEIVER
REX21PV
WASHER
REX0J5H
SCREW
REX0K34
SCREW
REX0KDJ
HR WIRE HARNESS
REX2B90
CONSOLE MAST
REX2ARP
WASHER
REX0J5G
UPPER MAIN
WIRE HARNESS
REX210E
SCREW
REX0K01
STRAIN RELIEF
REX015D
PANEL
REX2B72
MAST COVER
REX2AS8
SCREW
REX0KDJ
WASHER
REX0J5H

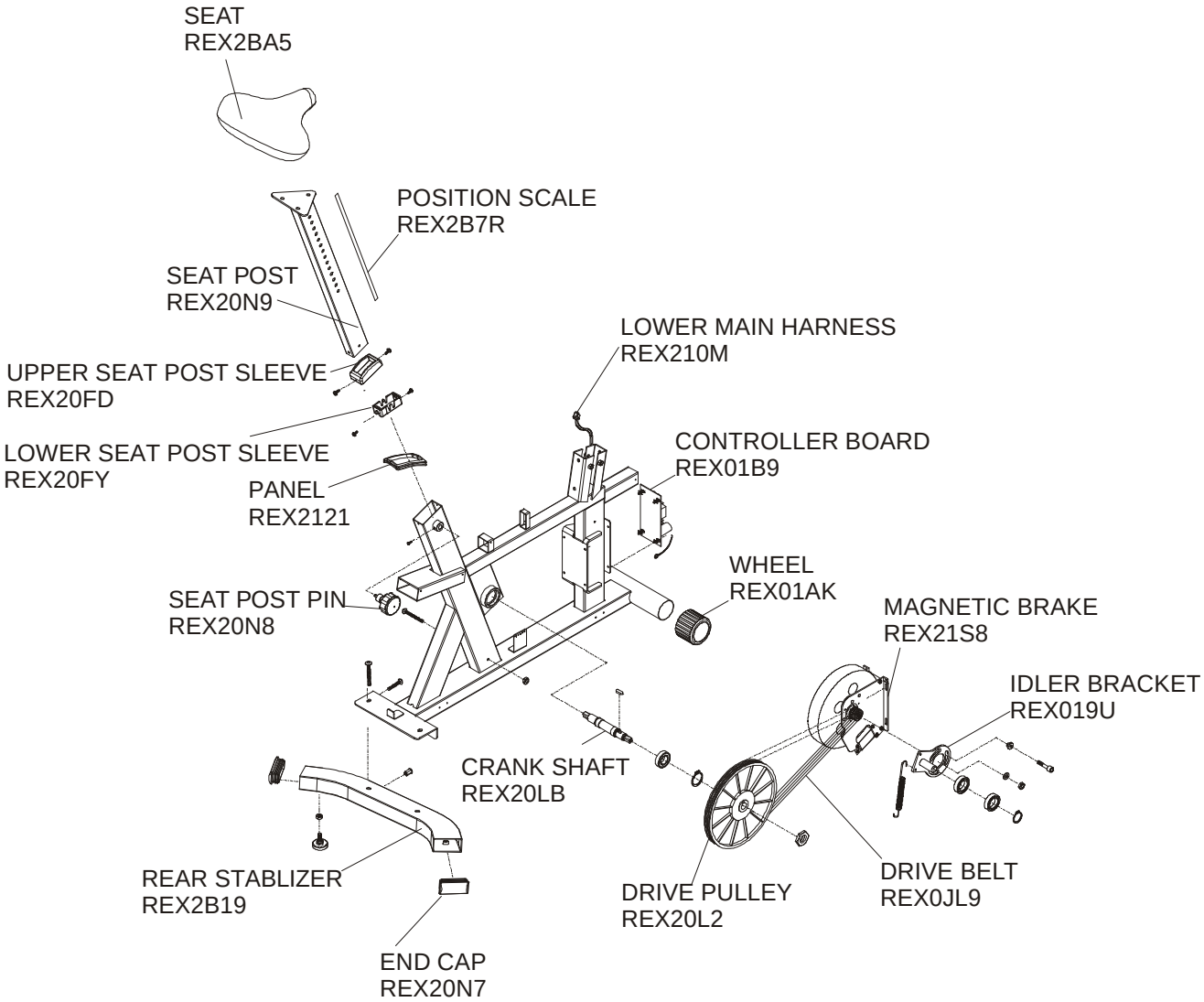
SEAT
REX2BA5
POSITION SCALE
REX2B7R
SEAT POST
REX20N9
UPPER SEAT POST SLEEVE
REX20FD
LOWER SEAT POST SLEEVE
REX20FY
PANEL
REX2121
LOWER MAIN HARNESS
REX210M
CONTROLLER BOARD
REX01B9
WHEEL
REX01AK
SEAT POST PIN
REX20N8
MAGNETIC BRAKE
REX21S8
IDLER BRACKET
REX019U
CRANK SHAFT
REX20LB
REAR STABLIZER
REX2B19
DRIVE PULLEY
REX20L2
DRIVE BELT
REX0JL9
END CAP
REX20N7

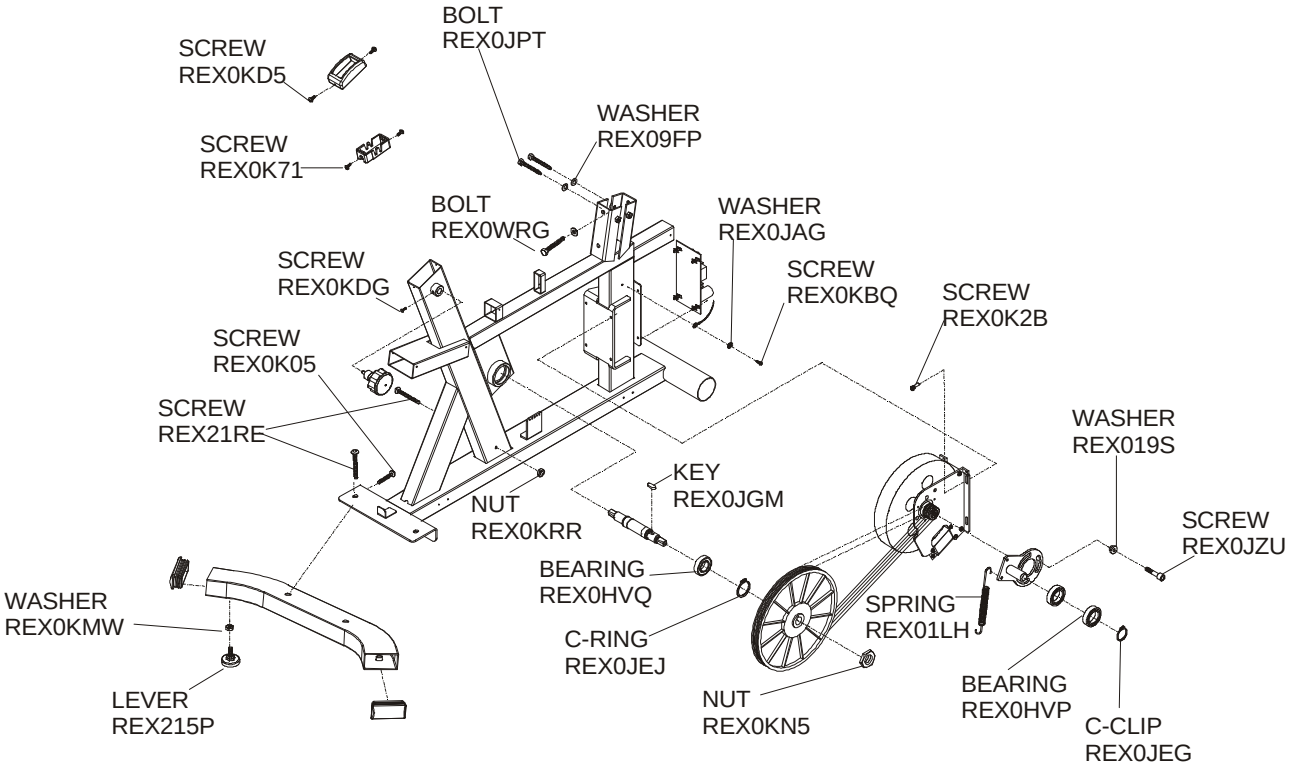
SCREW
REX0KD5
BOLT
REX0JPT
WASHER
REX09FP
SCREW
REX0K71
BOLT
REX0WRG
WASHER
REX0JAG
SCREW
REX0KDG
SCREW
REX0KBQ
SCREW
REX0K2B
SCREW
REX0K05
SCREW
REX21RE
WASHER
REX019S
KEY
REX0JGM
NUT
REX0KRR
SCREW
REX0JZU
BEARING
REX0HVQ
WASHER
REX0KMW
SPRING
REX01LH
C-RING
REX0JEJ
BEARING
REX0HVP
LEVER
REX215P
NUT
REX0KN5
C-CLIP
REX0JEG